CQRA10950HB42

2024. 4. 12 ATS

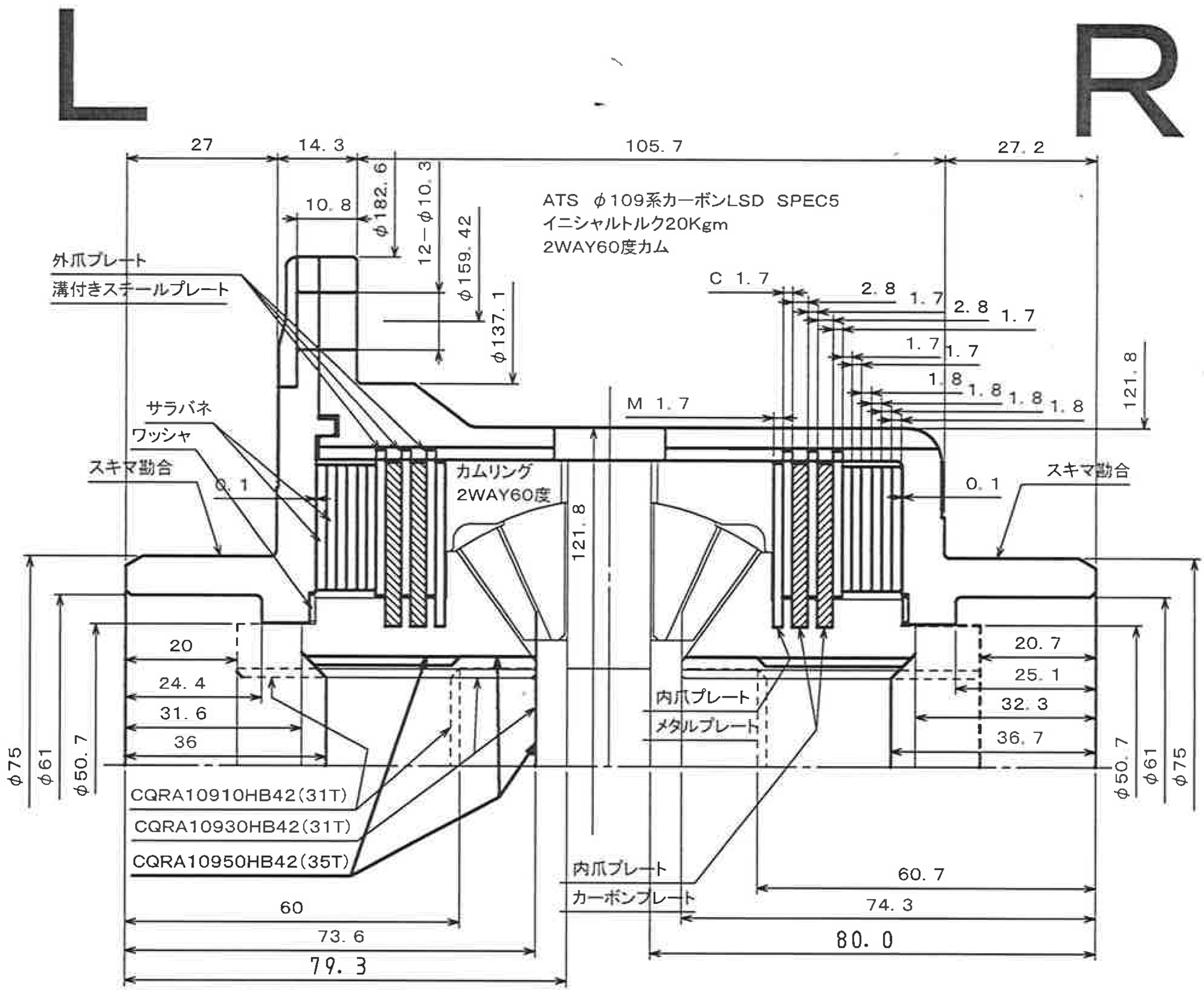

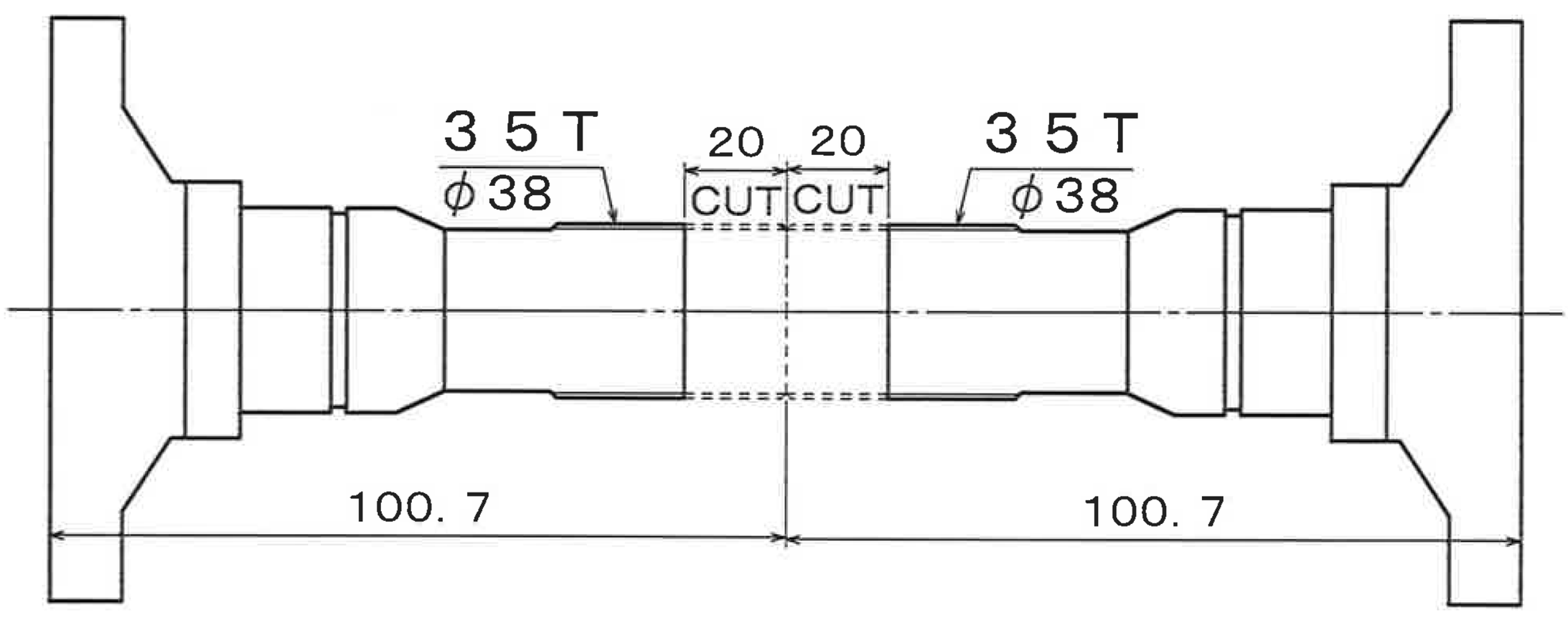

ATS Quick Change LSD CQRA10910HB42／CQRA10930HB42／CQRA10950HB42
Carbon Hybrid HB42 Initial Trque 60kgm
For Winters 10' Quick Change Side Shaft Type